NOTES:

1. OCTANE P/N: 104187
2. TRACEABILITY: OCTANE S/N
3. ALL DIMENSIONS IN PARENTHESES () ARE REFERENCE ONLY.
4. PART MARKING: OCTANE MODEL NUMBER LABEL
5. FREQUENCY RANGE: 1250-2650 MHz
6. WEIGHT: 4.0 oz

REVISIONS			
REV.	DESCRIPTION	DATE	APPROVED
A	ENGINEERING RELEASE	4/30/2026	JAA

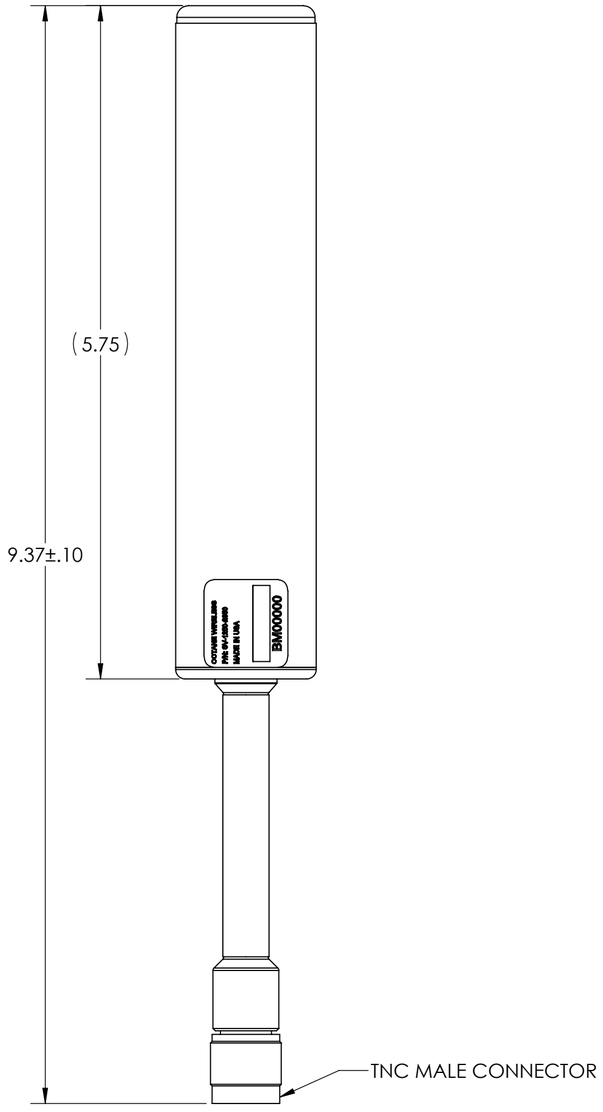

FRONT VIEW

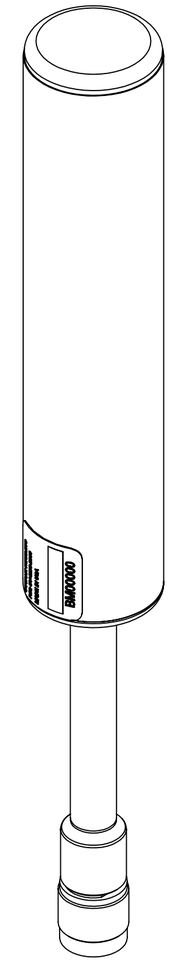

ISO VIEW

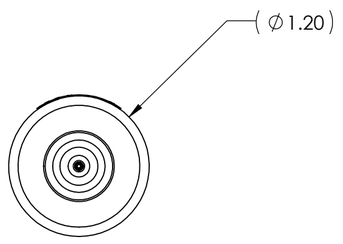

BOTTOM VIEW

THIRD ANGLE PROJECTION

PROPRIETARY AND CONFIDENTIAL

THE INFORMATION CONTAINED IN THIS DRAWING IS THE SOLE PROPERTY OF OCTANE WIRELESS. ANY REPRODUCTION IN PART OR AS A WHOLE WITHOUT THE WRITTEN PERMISSION OF OCTANE WIRELESS IS PROHIBITED.

UNLESS OTHERWISE SPECIFIED:

DIMENSIONS ARE IN INCHES

TOLERANCES:
TWO PLACE DECIMAL ±.010
THREE PLACE DECIMAL ±.005
ANGULAR ±1°

MATERIAL: SEE NOTES

FINISH: SEE NOTES

DO NOT SCALE DRAWING

	NAME	DATE
DRAWN	JAA	3/31/2026
ME CHECKED	YP	3/31/2026
ENG CHECKED	AF	4/26/2026
ENG APPR.	DN	4/29/2026
MFG APPR.	AR	4/17/2026

COMMENTS:

OCTANE WIRELESS
1340 CHARWOOD ROAD, SUITE L
HANOVER, MD 21076

TITLE:
ASSEMBLY, SPRING ANTENNA, 1250-2650 MHz, TNC MALE CONNECTOR

SIZE	DWG. NO.	REV
C	SV-1250-2650	A

SHEET SCALE 1:1 | SHEET 1 OF 1